SMB
CASE 403A−03
ISSUE J

SCALE 1:1
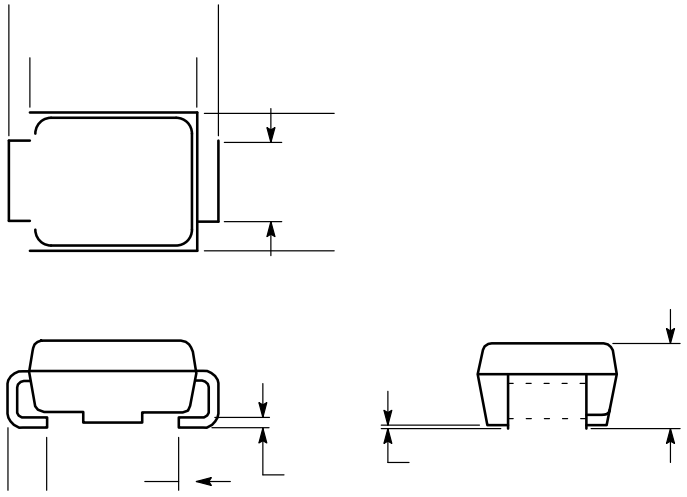
DATE 19 JUL 2012