BLOCK DIAGRAM AND TYPICAL CIRCUIT

Load

Figure 1. Functional Block Diagram

Figure 2. Typical Circuit

ABSOLUTE MAXIMUM RATINGS

Symbol	Parameter		Min	Typ	Max	Unit
V_S	Supply Voltage		0	–	6.3	V
V_{IN}	Input Voltage Range		0	–	6.3	V
T_J	Junction Temperature		–	–	+150	°C
T_{STG}	Storage Temperature Range		−65	–	+150	°C
T_L	Reflow Temperature, Soldering		–	–	+260	°C
Θ_{JA}	Package Thermal Resistance (Note 1)		–	456	–	°C/W
ESD	Electrostatic Discharge Protection	Human Body Model, JESD22−A114	–	–	5000	V
		Charged Device Model, JESD22−C101	–	–	1000	

Stresses exceeding those listed in the Maximum Ratings table may damage the device. If any of these limits are exceeded, device functionality should not be assumed, damage may occur and reliability may be affected.

1. Package thermal resistance (Θ_{JA}), JEDEC standard, multi−layer test boards, still air.

RECOMMENDED OPERATING CONDITIONS

Symbol	Parameter	Min	Max	Unit
T_A	Operating Temperature Range	−T		

TYPICAL PERFORMANCE CHARACTERISTICS

(T_A = 25°C, V_S = V_{IN} = 5 V, R_{OUT} = 100 Ω, R_{SENSE} = 100 Ω, unless otherwise noted.)

TYPICAL PERFORMANCE CHARACTERISTICS (Continued)

(T_A = 25°C, V_S = V_{IN} = 5 V, R_{OUT} = 100 Ω, R_{SENSE} = 100 Ω, unless otherwise noted.)

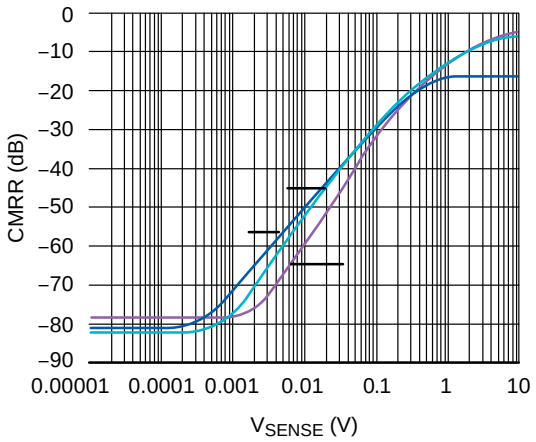

Figure 10. CMRR vs. Frequency

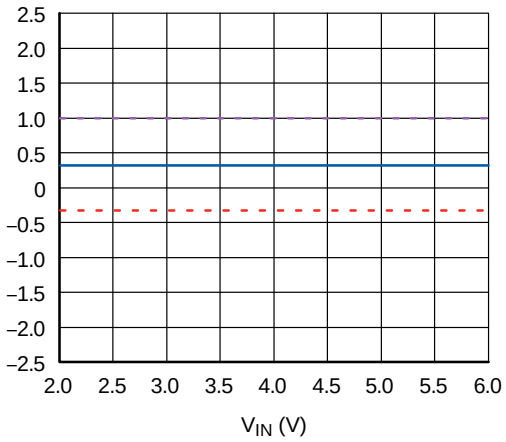

Figure 11. Output Current Error

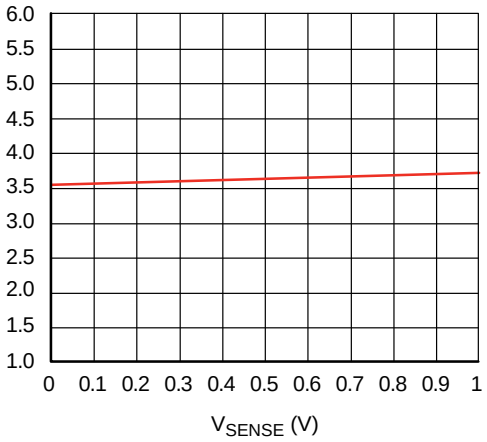

Figure 12. Supply Current vs. V_{SENSE}

APPLICATION INFORMATION

Detailed Description

The FAN4010 measures the voltage drop (V_{SENSE}) across an external sense resistor in the high−voltage side of the circuit. V_{SENSE} is converted to a linear current via an internal operational amplifier and precision 100 Ω resistor. The value of this current is V_{SENSE}/100 Ω (internal). Output current flows from the I_{OUT} pin to an external resistor R_{OUT} to generate an output voltage proportional to the current flowing to the load.

Use the following equations to scale a load current to an output voltage:

$$V_{SENSE} = I_{LOAD} \cdot R_{SENSE} \quad \text{(eq. 1)}$$

$$V_{OUT} = 0.01 \times V_{SENSE} \times R_{OUT} \quad \text{(eq. 2)}$$

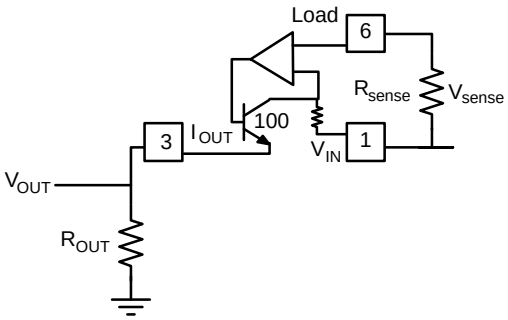

Figure 13. Functional Circuit

ORDERING INFORMATION

Device	Operating Temperature Range	Top Mark	Package	Shipping†
FAN4010IL6X	−40°C to +85°C	PX	6−Lead, Molded Leadless Package (MLP) (Pb−Free)	5000 / Tape & Reel
FAN4010IL6X−F113 (Note 6)				

†For information on tape and reel specifications, including part orientation and tape sizes, please refer to our Tape and Reel Packaging Specifications Brochure, BRD8011/D.

6. Legacy product number; please order FAN4010IL6X for new designs.
7. All packages are lead free per JEDEC: J−STD−020B standard.
8. Moisture sensitivity level for all parts is MSL−1.

MicroPak is trademark of

SIP6 1.45X1.0

2. DI ̃/I

onsemi, , and other names, marks, and brands are registered and/or common law trademarks of Semiconductor Components Industries, LLC dba “**onsemi**” or its affiliates and/or subsidiaries in the United States and/or other countries. **onsemi** owns the rights to a number of patents, trademarks, copyrights, trade secrets, and other intellectual property. A listing of **onsemi**’s product/patent coverage may be accessed at www.onsemi.com/site/pdf/Patent−Marking.pdf. **onsemi** reserves the right to make changes at any time to any products or information herein, without notice. The information herein is provided “as−is” and **onsemi** makes no warranty, representation or guarantee regarding the accuracy of the information, product features, availability, functionality, or suitability of its products for any particular purpose, nor does **onsemi** assume any liability arising out of the application or use of any product or circuit, and specifically disclaims any and all liability, including without limitation special, consequential or incidental damages. Buyer is responsible for its products and applications using **onsemi**