# Ignition Gate Drive IC

# FAN1100-F085

## Description

The FAN1100 F085 is designed to directly drive an ignition IGBT and control the current and spark event of the coil. The coil current is controlled via the input pin. When the input is driven high, the output of the FAN1100 F085 is enabled to turn on the IGBT and start charging the coil. The FAN1100 F085 will sink a current (IIN) into the input pin based on programmed current on the RA line.

An input spike filter suppresses input signals of less then 13 μs in duration. A Max Dwell timer is included in the FAN1100 F085 which will turn off the IGBT if the input stays active for longer than the programmed time. This time interval can be modified through an external capacitor on the CSSD pin. When the Max Dwell timer is exceeded, the FAN1100 F085 will enter a Soft Shut Down mode (SSD) slowly dropping the collector current by lowering the gate drive to the IGBT thereby discharging the coil such as to inhibit a spark event. Once the soft shutdown operation has started, any transitions on the input signal are ignored until after completion of the soft shutdown function. The FAN1100 F085 will also limit the collector current of the IGBT to $I_{C(lim)}$ during charging. This again is done through the sense resistor in the emitter leg of the Ignition IGBT developing a signal input to the Vsense pin of the FAN1100 F085.

## Features

- Signal Line Input Buffer
- Input Spike Filter
- Operation from Ignition or Battery Line
- Ground Shift Tolerance ±1.5 V
- Programmable Maximum Dwell Time
- Programmable Input Pull Down Current
- Control IGBT Current Limiting through $V_{SENSE}$ Pin
- Soft Shutdown following Max Dwell Time Out
- This is a Pb Free Device

## Applications

The FAN1100 F085 is an advanced Ignition IGBT control IC

## ORDERING INFORMATION

| Part Number | Operating Temperature Range | Package | Shipping |
|---|---|---|---|
| – | – ° ° | – | |

## Recommended External Components

## TYPICAL EXTERNAL COMPONENTS

| Component | Description | Vendor | Parameter | Typ. | Unit |
|---|---|---|---|---|---|
| | | | | | Ω |
| | | | | | μ |
| | | | | | |
| | | | | | |
| | | | | | Ω |

## Typical Application

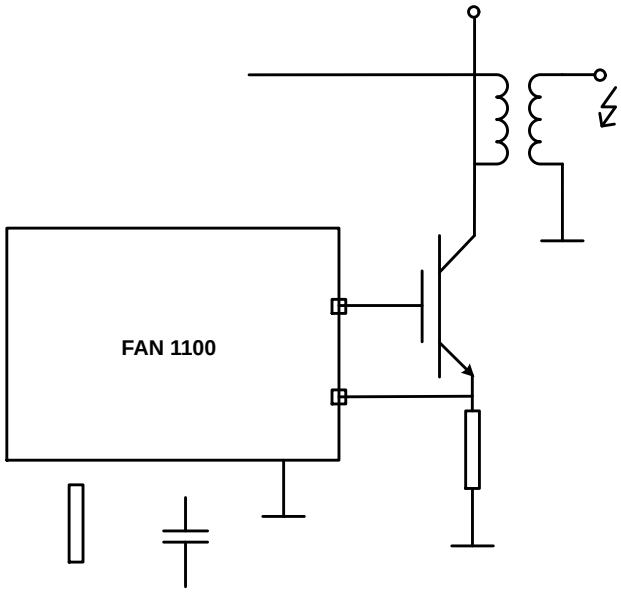


**Figure 1. Typical Application**

**Block Diagram**

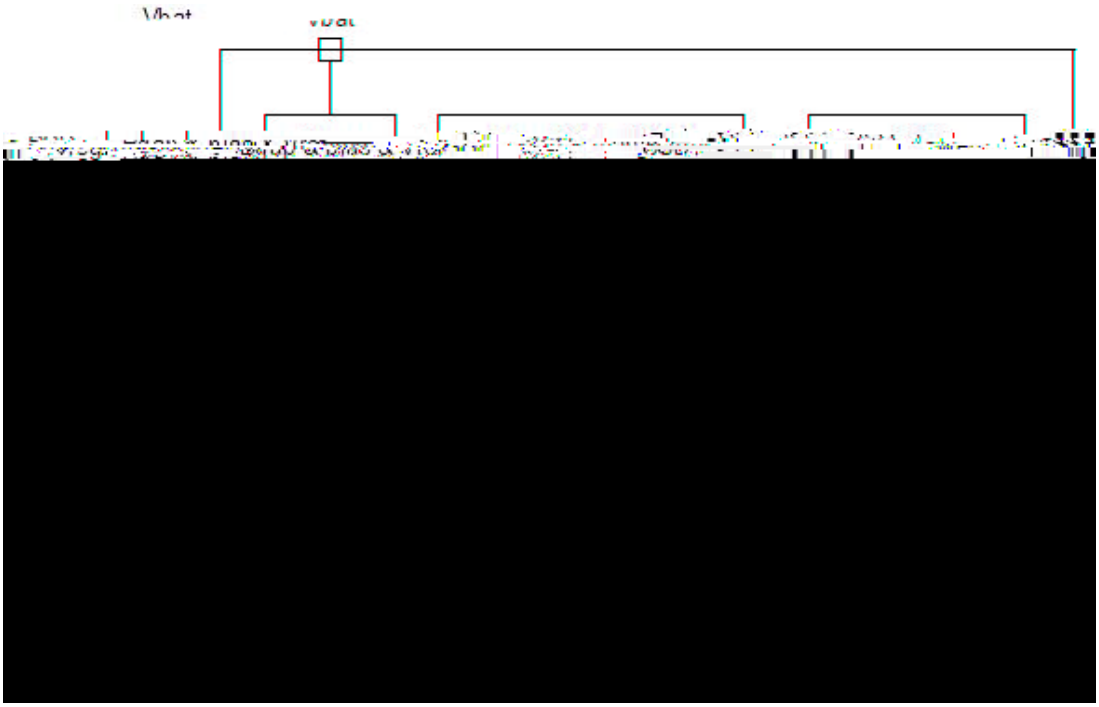

**Figure 2. Block Diagram**

**Package Outline**

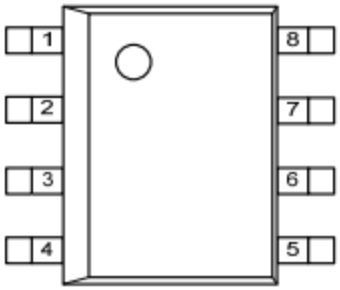


**Figure 3. Pin Assignment (Top View)**

**PIN DESCRIPTION**

| Name | Type | Description |
|---|---|---|
| | | |
| | | |
| | | |
| | | – – |
| | | |

## RECOMMENDED OPERATING CONDITIONS

| Symbol | Characteristic | Min. | Typ. | Max. | Units |
|---|---|---|---|---|---|
| | | | | | |
| | | | | | |
| | ° | | | | Ω |
| | | | | | Ω |

**onsemi**

## ELECTRICAL CHARACTERISTICS

| Symbol | Parameter | Conditions | Min. | Typ. | Max. | Unit |
|---|---|---|---|---|---|---|
| **POWER SUPPLY CONDITIONS** | | | | | | |

Figure 5 shows the Relationship between the CSSD capacitor and Max Dwell Time

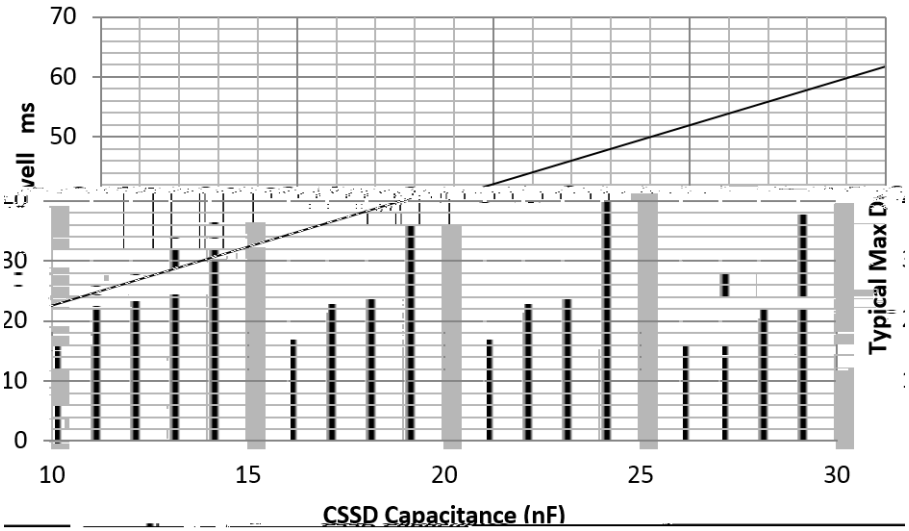


**Figure 5. $T_{DMAX}$ as Function of External CSSD Capacitor**

Figure 6 shows the Signal input current vs. IRA current

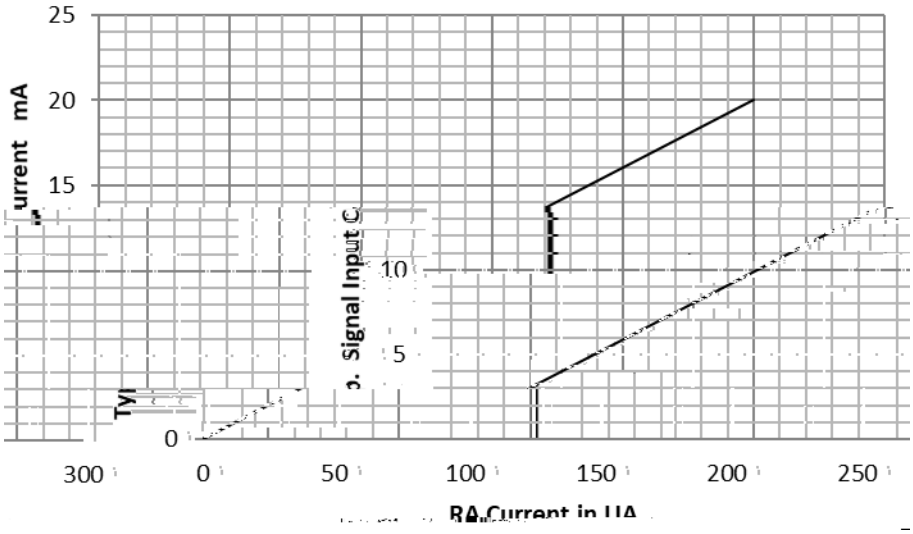


**Figure 6. Interrelationship between Signal Input Current and IRA**

**SOIC8**
CASE 751EB
ISSUE A

DATE 24 AUG 2017

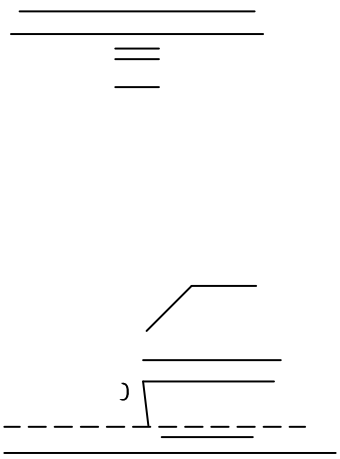

12, VARIATION AA.