CAT3643

3-Channel Ultra High Efficiency LED Driver

Description

The CAT3643 is a high efficiency fractional charge pump that can drive up to three LEDs programmable by a one wire digital interface. The inclusion of a 1.33x fractional charge pump mode increases device efficiency by up to 10% over traditional 1.5x charge pumps with no added external capacitors.

Low noise input ripple is achieved by operating at a constant switching frequency which allows the use of small external ceramic capacitors. The multi−fractional charge pump supports a wide range of input voltages from 2.4 V to 5.5 V.

The EN/DIM logic input functions as a chip enable and a digital dimming interface for current setting of all LEDs. Six different current ratios are available via the interface.

The device is available in the 16−pad TQFN or 12−pad TDFN 3 mm x 3 mm package with a max height of 0.8 mm.

ON Semiconductor's 1.33x charge pump switching architecture is patented.

Features

- High Efficiency 1.33x Charge Pump
- Charge Pump: 1x, 1.33x, 1.5x, 2x
- Drives up to 3 LEDs at 32 mA Each
- Powerciency 93% Max
- 12−pad 3 x 3 TDFN and 16−pad TQFN Packages
- These Devices are Pb−Free, Halogen Free/BFR Free and are RoHS Compliant
- Applicatio

MARKING DIAGRAMS

HABF

ORDERING INFORMATION

Device	Package	Shipping†
CAT3643HV2−T2 (Note 1)	TDFN−12 (Pb−Free)	2000 / Tape & Reel
CAT3643HV2−GT2 (Note 2)	TDFN−12 (Pb−Free)	2000 / Tape & Reel

1. Matte−Tin Plated Finish (RoHS−

© Semiconductor Components Industries, LLC, 2014

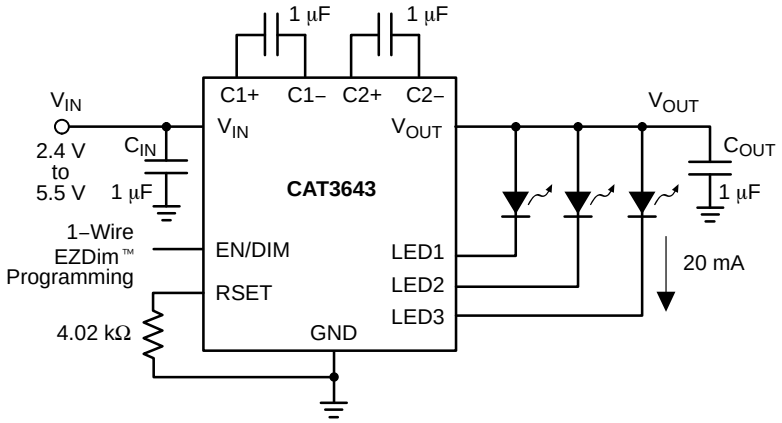

Figure 1. Typical Application Circuit

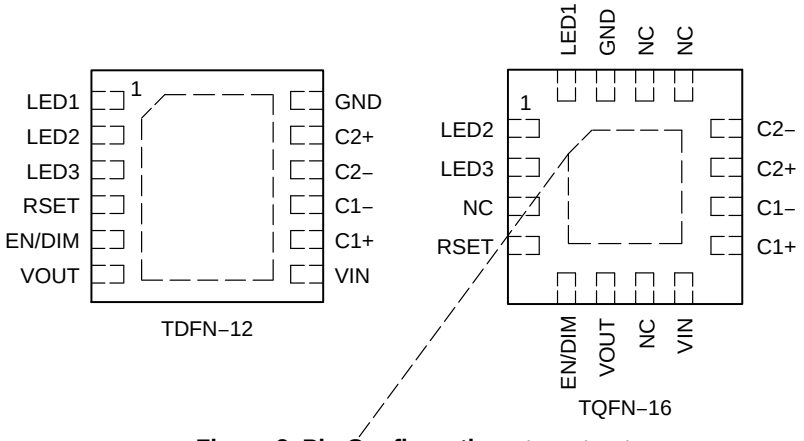

Figure 2. Pin Configurations (Top Views)

The CAT3643 is offered in three different packages. The 12−pad TDFN 3 mm x 3 mm with a max height of 0.8 mm is pin−compatible to the ON Semiconductor CAT3603 LED driver. The 16−pad TQFN 3 mm x 3 mm with max height of 0.8 mm is also offered.

Table 1. ABSOLUTE MAXIMUM RATINGS

Parameter	Rating	Unit

Table 3. ELECTRICAL OPERATING CHARACTERISTICS

(over recommended operating conditions unless specified otherwise) V_{IN} = 3.6 V, EN = High, T_{AMB} = 25°C.

Symbol	Name	Conditions	Min	Typ	Max	Units
I_Q	Quiescent Current	1x mode, no load 1.33x mode, no load 1.5x mode, no load 2x mode, no load		1.0 1.7 2.2 2.4		mA
I_{QSHDN}	Shutdown Current	V_{EN} = 0 V			1	μA
$I_{LED-ACC}$	LED Current Accuracy	$(I_{LEDAVG} - I_{NOMINAL}) / I_{NOMINAL}$ RSET = 5 kΩ		±2		%
$I_{LED-DEV}$	LED Channel Matching	$(I_{LED} - I_{LEDAVG}) / I_{LEDAVG}$		±1.5		%
V_{RSET}	RSET Regulated Voltage		0.58	0.6	0.62	V
R_{OUT}						

Table 4. RECOMMENDED EN/DIM TIMING

(For 2.4 V ≤ V_{IN} ≤ 5.5 V, over full ambient temperature range −40°C to +85°C.)

Symbol	Name	Conditions	Min	Typ	Max	Units
T_{SETUP}	EN/DIM setup from shutdown		10			μs
T_{LO}	EN/DIM program low time		0.2		100	μs
T_{HI}	EN/DIM program high time		0.2			μs
T_{PWRDWN}	EN/DIM low time to shutdown		1.5			ms
T_{LED}	LED current settling time			40		μs

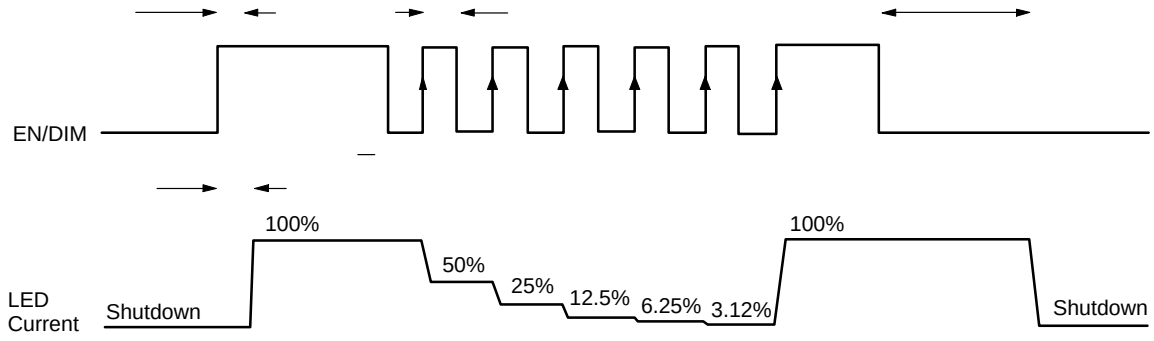

Figure 3. EN/DIM Digital Dimming Timing Diagram

TYPICAL PERFORMANCE CHARACTERISTICS

(V_{IN} = 3.6 V, I_{OUT} = 60 mA (3 LEDs at 20 mA), C_{IN} = C_{OUT} = C_1 = C_2 = 1 μF, T_{AMB} = 25°C unless otherwise specified.)

TYPICAL PERFORMANCE CHARACTERISTICS

(V_{IN} = 3.6 V, I_{OUT} = 60 mA (3 LEDs at 20 mA), C_{IN} = C_{OUT} = C_1 = C_2 = 1 μF, T_{AMB} = 25°C unless otherwise specified.)

Figure 10. Switching Frequency vs. Temperature

TYPICAL PERFORMANCE CHARACTERISTICS

(V

CAT3643

Unused LED Channels

For applications not requiring all the channels, it is recommended the unused LED pins be tied directly to V_{OUT} (see Figure 30).

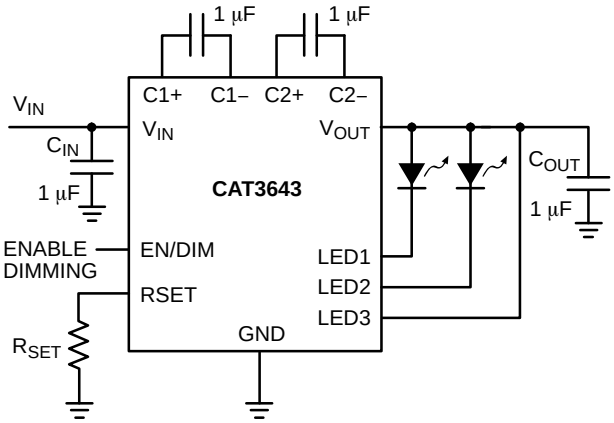

Figure 30. Application with 2 LEDs

Protection Mode

If an LED is disconnected, the driver senses that and automatically ignores that channel. When all LEDs are disconnected, the driver goes to 1x mode where the output is equal to the input voltage.

As soon as the output exceeds about 6 V, the driver resets itself and reevaluate the mode.

If the die temperature exceeds +150°C, the driver will enter a thermal protection shutdown mode. When the device temperature drops by about 20°C, the device will resume normal operation.

LED Selection

LEDs with forward voltages (V_F) ranging from 1.3 V to 4.3 V may be used. Selecting LEDs with lower V_F is recommended in order to improve the efficiency by keeping the driver in 1x mode longer as the battery voltage decreases.

For example, if a white LED with a V_F of 3.3 V is selected over one with V_F of 3.5 V, the driver will stay in 1x mode for lower supply voltage of 0.2 V. This helps improve the efficiency and extends battery life.

External Components

The driver requires four external 1 μF ceramic capacitors for decoupling input, output, and for the charge pump. Both capacitors type X5R and X7R are recommended for the LED driver application. In all charge pump modes, the input current ripple is kept very low by design and an input bypass capacitor of 1 μF is sufficient.

In 1x mode, the device operates in linear mode and does

TQFN16, 3x3

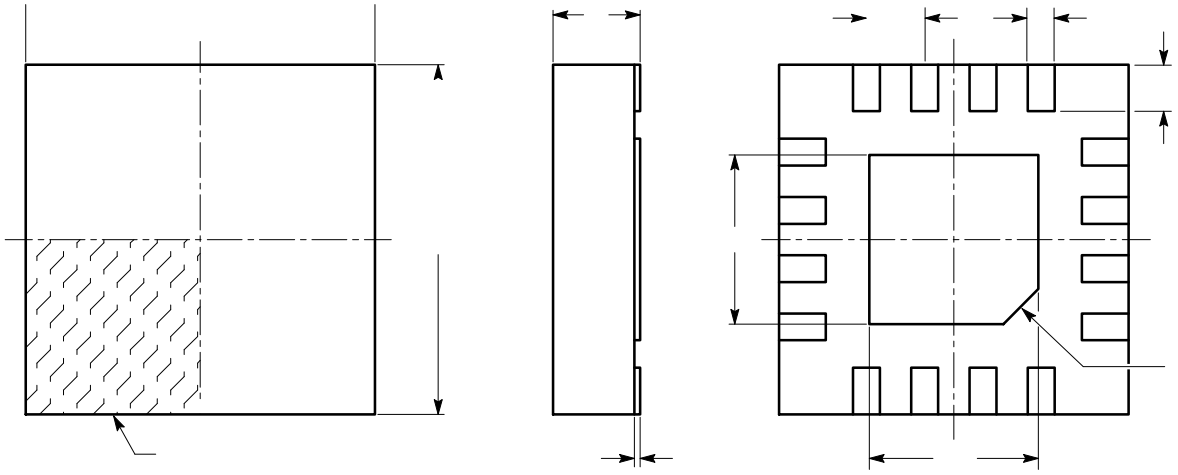

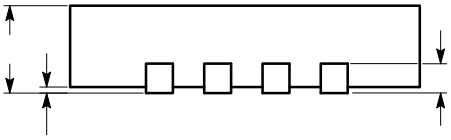

TDFN12, 3x3
CASE 511AN−01
ISSUE A

DATE 18 MAR 2009

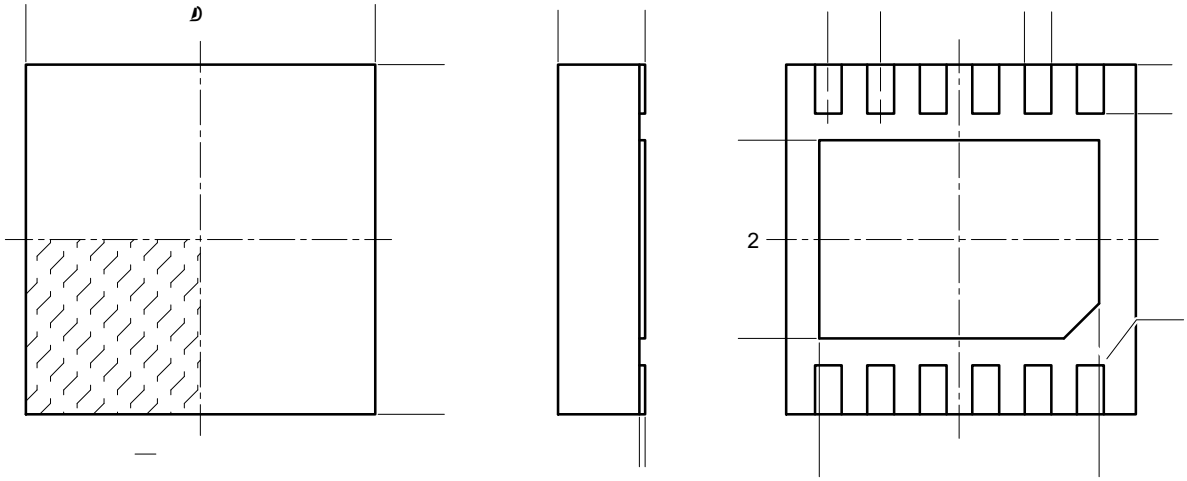

TOP VIEW **SIDE VIEW** **BOTTOM VIEW**

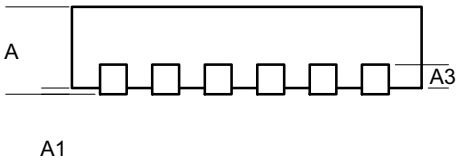

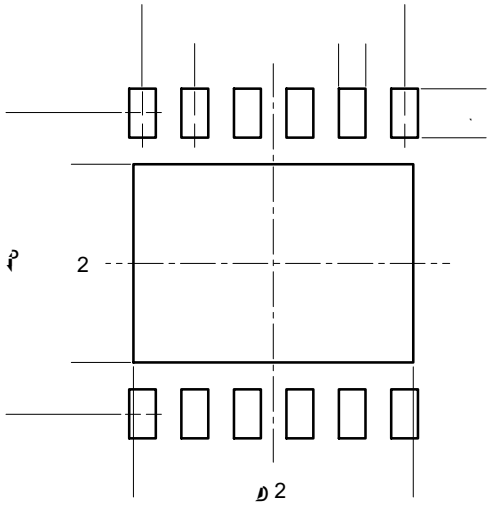

onsemi, , and other names, marks, and brands are registered and/or common law trademarks of Semiconductor Components Industries, LLC dba “**onsemi**” or its affiliates and/or subsidiaries in the United States and/or other countries. **onsemi** owns the rights to a number of patents, trademarks, copyrights, trade secrets, and other intellectual property. A listing of **onsemi**’s product/patent coverage may be accessed at www.onsemi.com/site/pdf/Patent−Marking.pdf. **onsemi** reserves the right to make changes at any time to any products or information herein, without notice. The information herein is provided “as−is” and **onsemi** makes no warranty, representation or guarantee regarding the accuracy of the information, product features, availability, functionality, or suitability of its products for any particular purpose, nor does **onsemi** assume any liability arising out of the application or use of any product or circuit, and specifically disclaims any and all liability, including without limitation special, consequential or incidental damages. Buyer is responsible for its products and applications using **onsemi**