AMIS-42700

Dual High Speed CAN Transceiver

General Description

–

–

– –

-
-
-
-
-
-
-

–

–

Key Features

- –
-
-
-
- – –
- – ±
- –
- –
-
-
-

ON Semiconductor

http://onsemi.com

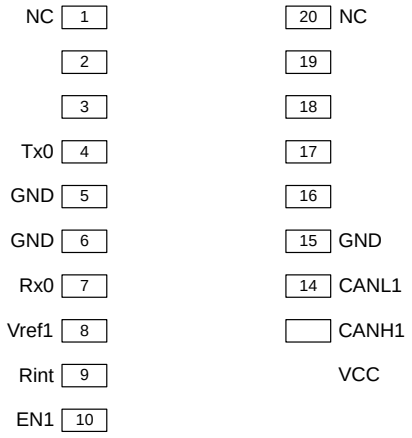

SOIC 20
WC SUFFIX
CASE 751AQ

ORDERING INFORMATION

See detailed ordering and shipping information in the package dimensions section on page 12 of this data sheet.

January, 2009 − Rev. 5

Publication Order Number:
AMIS−42700/D

Table 1. Technical Characteristics

Symbol	Parameter	Conditions	Min.	Max.	Unit
V_{CANHx}	DC voltage at pin CANH1/2	$0 < V_{CC} < 5.25$ V; no time limit	−45	+45	V
V_{CANLx}	DC voltage at pin CANL1/2	$0 < V_{CC} < 5.25$ V; no time limit	−45	+45	V
$V_{o(dif)(bus\_dom)}$	Differential bus output voltage in dominant state	$42.5\ \Omega < R_{LT} < 60\ \Omega$	1.5	3	V
CM−range	Input common−mode range for comparator	Guaranteed differential receiver threshold and leakage current			

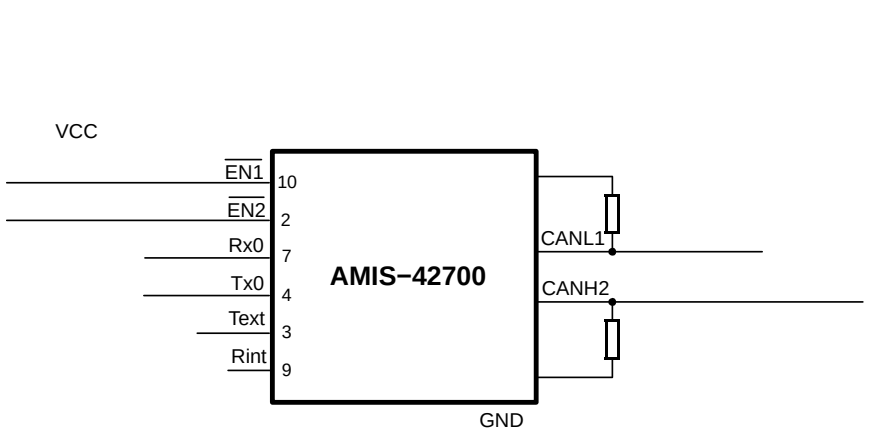
VBAT
VCC
EN1
10
EN2
2
Rx0
7
Tx0
4
Text
3
Rint
9
AMIS−42700
CANL1
CANH2
GND

Functional Description

Overall Functional Description

–

–

μ –

Table 3. Function of the Logic Unit (**bold** letters describe input signals)

EN1B	EN2B	TX0	TEXT	Bus 1 State	Bus 2 State	RX0	RINT
0	1	1	1	recessive	**dominant** (Note 3)	1	1
1	0	0	0	recessive	dominant	0	0
1	0	0	1	recessive	dominant	0	0
1	0	1	0	recessive	dominant	0	1
1	0	1	1	recessive	recessive	1	1
1	0	1	1	**dominant** (Note 3)	recessive	1	1
1	0	1	1	recessive	**dominant** (Note 3)	0	0
1	1	0	0	recessive	recessive	0	0
1	1	0	1	recessive	recessive	0	0
1	1	1	0	recessive	recessive	0	1
1	1	1	1	recessive	recessive	1	1
1	1	1	1	**dominant** (Note 3)	recessive	1	1
1	1	1	1	recessive	**dominant** (Note 3)	1	1

3. Dominant detected by the corresponding receiver.

Receivers

–

Short Circuits

Reverse Electronic Unit (ECU) Supply

–

Faulty Supply

Electrical Characteristics

Definitions

Absolute Maximum Ratings

Table 4. Absolute Maximum Ratings

Symbol	Parameter	Conditions	Min.	Max.	Unit
V_{CC}	Supply voltage		−0.3	+7	V
V_{CANHx}	DC voltage at pin CANH1/2	$0 < V_{CC} < 5.25$ V; no time limit	−45	+45	V
V_{CANLx}	DC voltage at pin CANL1/2	$0 < V_{CC} < 5.25$ V; no time limit	−45	+45	V
V_{digIO}	DC voltage at digital IO pins (EN1B, EN2B,				

Table 5. Thermal Characteristics

Symbol	Parameter	Conditions	Value	Unit
$R_{th(vj-a)}$	Thermal resistance from junction to ambient in SO20 package	In free air	85	K/W
$R_{th(vj-s)}$	Thermal resistance from junction to substrate of bare die	In free air	45	K/W

Table 6. DC and Timing Characteristics (V_{CC} = 4.75 to 5.25 V; T_{junc} = −40 to +150°C; R_{LT} = 60 W unless specified otherwise.)

Symbol	Parameter	Conditions	Min.	Typ.	Max.	Unit
SUPPLY (pin V_{CC})						
I_{CC}	Supply current, no loads on digital outputs, both busses enabled	Dominant transmitted Recessive transmitted		45	137.5 19.5	

Table 6. DC and Timing Characteristics (V_{CC} = 4.75 to 5.25 V; T_{junc} = −40 to +150°C; R_{LT} = 60 W unless specified otherwise.)

Symbol	Parameter	Conditions	Min.	Typ.	Max.	Unit
BUS LINES (pins CANH1/2 and CANL1/2)						
$V_{i(dif)(th)}$	Differential receiver threshold voltage	−5 V < V_{CANLx} < +12 V; −5 V < V_{CANHx} < +12 V; see Figure 6	0.5	0.7	0.9	V
$V_{ihcm(dif)\ (th)}$	Differential receiver threshold voltage for high common−mode	−35 V < V_{CANLx} < +35 V; −35 V < V_{CANHx} < +35 V; see Figure 6	0.3	0.7	1.05	V
$V_{i(dif)\ (hys)}$	Differential receiver input voltage hysteresis	−35V < V_{CANL} < +35 V; −35 V < V_{CANH} < +35 V; see Figure 6				

Measurement Set−ups and Definitions

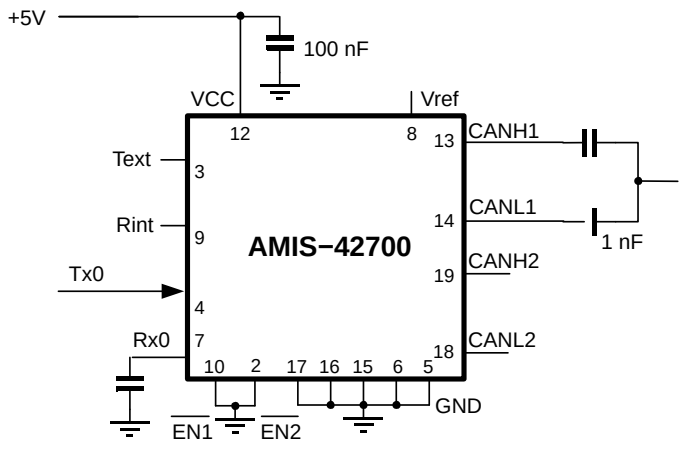

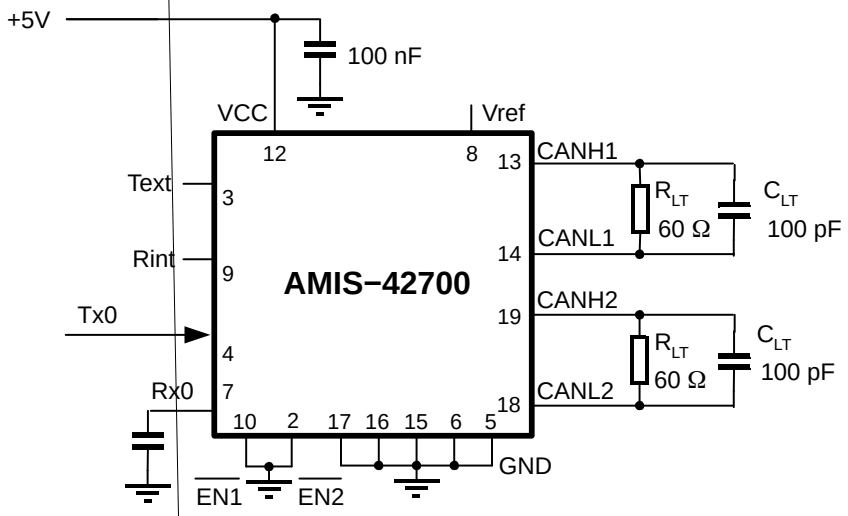
+5V
100 nF
VCC
Vref
12
8
13
CANH1
Text
3
R_{LT}
60 Ω
C_{LT}
100 pF
CANL1
14
Rint
9
AMIS−42700
CANH2
Tx0
19
R_{LT}
60 Ω
C_{LT}
100 pF
4
Rx0
7
CANL2
18
10
2
17
16
15
6
5
GND
EN1
EN2

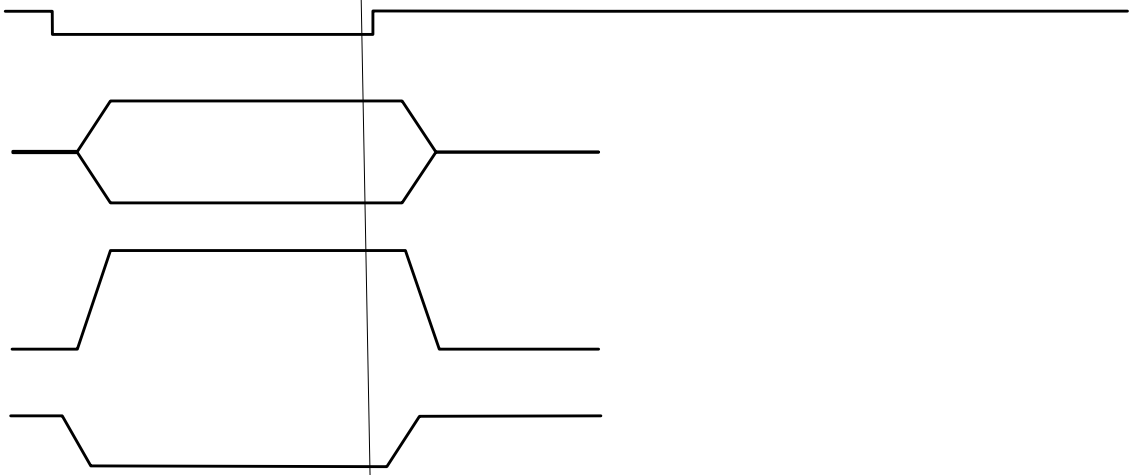

Soldering

Introduction to Soldering Surface Mount Packages

Re−flow Soldering

Wave Soldering

Manual Soldering

Table 7. Soldering Process

Package	Soldering Method	
	Wave	**Re−flow** (Note 9)
BGA, SQFP	Not suitable	Suitable
HLQFP, HSQFP, HSOP, HTSSOP, SMS	Not suitable (Note 10)	Suitable
PLCC (Note 11), SO, SOJ	Suitable	Suitable
LQFP, QFP, TQFP	Not recommended (Notes 11 and 12)	Suitable
SSOP, TSSOP, VSO	Not recommended (Note 13)	Suitable

9. All SMD packages are moisture sensitive. Depending upon the moisture content, the maximum temperature (with respect to time) and body Q.06.t 2.moi90709 refBTin 575.5oards

SOIC 20 W
CASE 751AQ 01
ISSUE O

DATE 19 JUN 2008

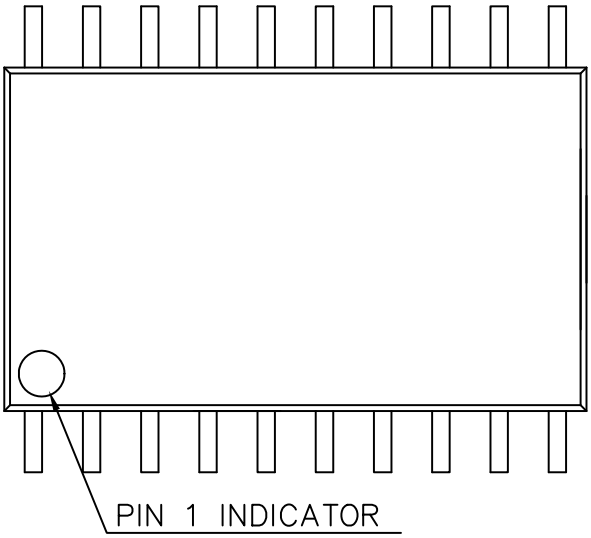

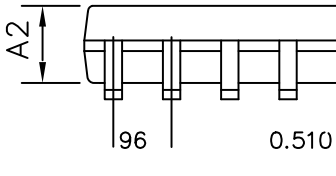

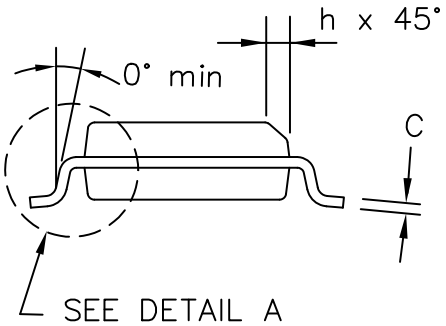

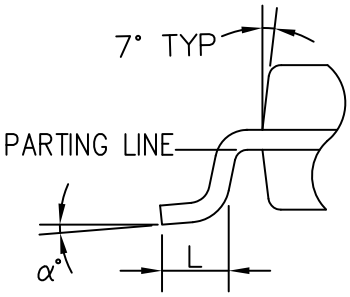

DETAIL A

DIMENSIONS IN INCHE			
SYMBOL		NOM	MAX.
A	0.093		0.104
A1			0.012
A2	0.088	0.094	0.100
B			
C	00		
D			-
E	0.292	0.296	0.299
e	.050 BSC.		
H		0.402	0.419
h	0.010	0.015	0.019
L	0.016	0.033	
	0°	5°	8°